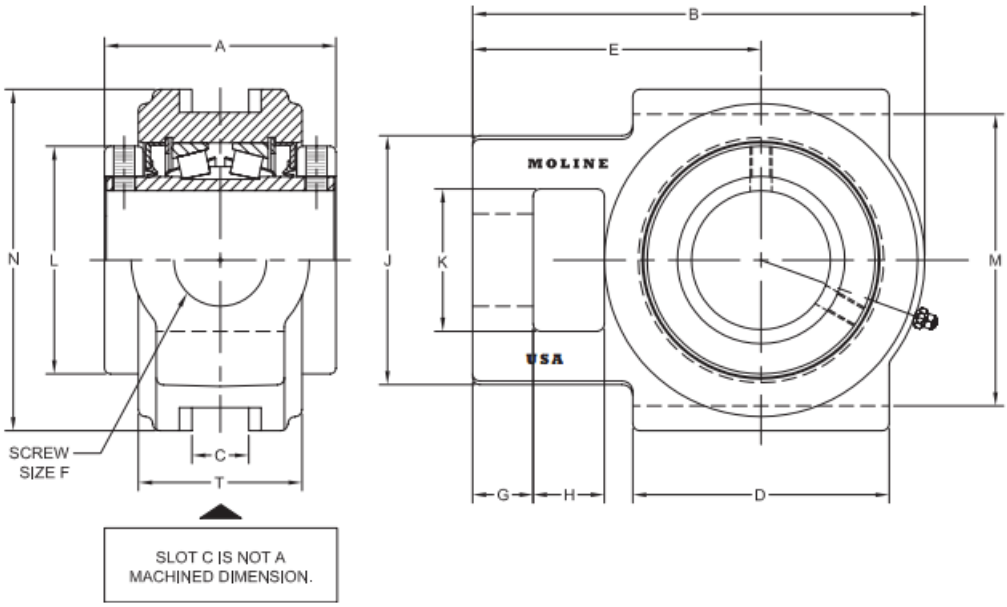


| SHAFT SIZE | MOLINE PART # | DIMENSIONS (INCHES) | | | | | | | | | | | | | | WEIGHT LBS. |
|---|---|---|---|---|---|---|---|---|---|---|---|---|---|---|---|---|
| | | A | B | C | D | E | F | G | H | J | K | L | M | N | T | |
| 1 3/4<br>1 7/8<br>1 15/16<br>2<br>45mm<br>50mm | 19351112<br>19351114<br>19351115<br>19351200<br>19351045<br>19351050 | 3 1/2 | 6 5/16 | 11/16 | 3 3/4 | 3 15/16 | 1 | 15/16 | 3/4 | 3 5/16 | 1 15/16 | 3 3/8 | 4 | 4 3/4 | 2 7/16 | 12 |
| 2 3/16<br>55mm | 19351203<br>19351055 | 3 3/4 | 7 1/8 | 13/16 | 3 3/4 | 4 5/8 | 1 1/8 | 1 | 1 | 3 7/8 | 2 1/4 | 3 3/4 | 4 1/2 | 5 1/4 | 2 9/16 | 16 |
| 2 1/4<br>2 7/16<br>2 1/2<br>60mm<br>65mm | 19351204<br>19351207<br>19351208<br>19351060<br>19351065 | 4 | 7 13/16 | 1 1/32 | 4 1/2 | 5 1/16 | 1 1/2 | 1 1/16 | 1 1/4 | 4 1/4 | 2 1/2 | 4 | 5 1/8 | 6 | 2 3/4 | 21 |
| 2 11/16<br>2 3/4<br>2 15/16<br>3<br>70mm<br>75mm | 19351211<br>19351212<br>19351215<br>19351300<br>19351070<br>19351075 | 4 1/2 | 9 1/8 | 1 25/32 | 4 3/4 | 5 7/8 | 1 1/2 | 1 3/8 | 1 1/4 | 4 7/8 | 2 3/4 | 4 11/16 | 5 15/16 | 6 3/4 | 3 | 30 |
| 3 3/16<br>3 1/4<br>3 7/16<br>3 1/2<br>80mm<br>85mm<br>90mm | 19351303<br>19351304<br>19351307<br>19351308<br>19351080<br>19351085<br>19351090 | 5 | 10 1/4 | 1 25/32 | 6 | 6 3/8 | 1 3/4 | 1 1/16 | 1 5/8 | 4 7/8 | 2 7/8 | 5 5/16 | 6 13/16 | 7 13/16 | 3 13/16 | 45 |