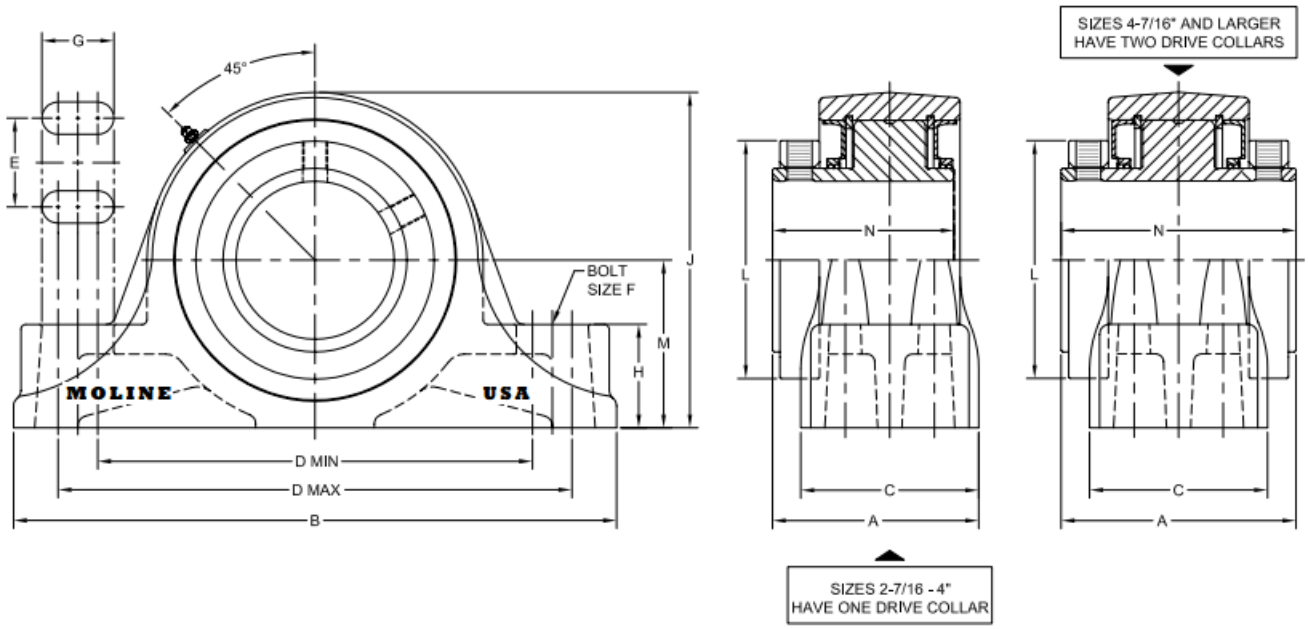


| SHAFT SIZE | MOLINE PART # | | DIMENSIONS (INCHES) | | | | | | | | | | | | | | WEIGHT LBS. |
|---|---|---|---|---|---|---|---|---|---|---|---|---|---|---|---|---|---|
| | EXP | NON-EXP | A | B | C | MIN D | D CENTER | MAX D | E | F | G | H | J | L | M | N | |
| 2 7/16<br>2 1/2<br>60mm<br>65mm | 19141207<br>19141208<br>19141060<br>19141065 | 19241207<br>19241208<br>19241060<br>19241065 | 3 3/4 | 9 1/4 | 3 1/4 | 6 7/8 | 7 1/4 | 7 5/8 | 1 3/4 | 1/2 | 15/16 | 1 3/4 | 5 11/16 | 4 | 2 3/4 | 3 3/8 | 17 |
| 2 11/16<br>2 3/4<br>2 15/16<br>3<br>70mm<br>75mm | 19141211<br>19141212<br>19141215<br>19141300<br>19141070<br>19141075 | 19241211<br>19241212<br>19241215<br>19241300<br>19241070<br>19241075 | 4 1/4 | 10 1/2 | 3 3/4 | 7 7/8 | 8 1/8 | 8 3/8 | 1 7/8 | 5/8 | 15/16 | 2 1/4 | 6 7/16 | 4 3/8 | 3 1/4 | 3 5/8 | 26 |
| 3 3/16<br>3 7/16<br>3 1/2<br>80mm<br>85mm<br>90mm | 19141303<br>19141307<br>19141308<br>19141080<br>19141085<br>19141090 | 19241303<br>19241307<br>19241308<br>19241080<br>19241085<br>19241090 | 4 9/16 | 13 | 3 7/8 | 9 1/4 | 10 | 10 3/4 | 2 | 3/4 | 1 9/16 | 2 1/4 | 7 1/2 | 5 1/8 | 3 3/4 | 4 1/32 | 38 |
| 3 11/16<br>3 15/16<br>4<br>100mm | 19141311<br>19141315<br>19141400<br>19141100 | 19241311<br>19241315<br>19241400<br>19241100 | 5 1/4 | 15 1/4 | 4 1/2 | 11 | 12 | 13 | 2 1/4 | 3/4 | 1 13/16 | 2 5/8 | 8 1/2 | 6 | 4 1/4 | 4 19/32 | 50 |
| 4 7/16<br>4 1/2<br>110mm<br>115mm | 19141407<br>19141408<br>19141110<br>19141115 | 19241407<br>19241408<br>19241110<br>19241115 | 6 1/4 | 16 1/2 | 4 3/4 | 13 | 13 1/2 | 14 | 2 1/2 | 3/4 | 1 5/16 | 2 3/4 | 9 1/2 | 6 1/8 | 4 3/4 | 6 1/4 | 72 |
| 4 15/16<br>5<br>125mm<br>130mm | 19141415<br>19141500<br>19141125<br>19141130 | 19241415<br>19241500<br>19241125<br>19241130 | 7 7/16 | 18 5/8 | 5 3/8 | 15 | 15 1/2 | 16 | 2 3/4 | 7/8 | 1 1/2 | 3 | 11 1/8 | 6 7/8 | 5 1/2 | 7 7/16 | 107 |